Model Number:
OPACH4212

OceanAire

OUTDOOR PORTABLE HEAT PUMP WITH FRAME

ENGINEERING, INSTALLATION AND SERVICE MANUAL

OCEANAIRE, Inc.
1731 Wall Street, Suite 100 Mount Prospect, IL 60056
(847) 583-0311 oceanaire-inc.com

PROUDLY MADE IN THE USA

OA-IN-OPAC14432-01.03.22

TABLE OF CONTENTS

Page 3 General Information

Page 4 Specifications

Page 5 OPACH4212 Details

Page 6 Set Up Guidelines

Page 7 Controls/Components

Page 8 Wiring Diagram

Page 9 Start-Up and Operation

Page 10 Troubleshooting Guide

Page 11 Product Warranty

FORWARD

This manual provides the user with basic details for the installation and operation of the OceanAire OPACH4212 Outdoor Portable Heat Pump. It is highly recommended to read and fully understand the instructions outlined within this manual, before operating the OPACH4212 unit.

As with all commercial air conditioning equipment, it is recommended to have the OPACH4212 sized and installed by a licensed specifying engineer and contractor, in accordance with all local and state codes. The length of service received can be extended by following the installation instructions and adhering to a preventive maintenance program consistent with outdoor equipment of this type.

NOTICE

In our ongoing process of continuous improvement, the items and procedures described in this manual are subject to change without notice. To communicate with us more effectively, please note model and serial number of the unit before contacting the factory with questions and inquiries.

GENERAL DESCRIPTION

GENERAL INFORMATION

The Oceanaire OPACH4212 is an outdoor portable heat pump designed for temporary cooling and heating applications. With 3.5 tons of cooling capacity the OPACH4212 can deliver cooling for almost any industrial application. With 38,000 BTUH of Heating capacity, and 7 KW Auxiliary Electric Heat, the OPACH4212 can heat a defined space as well.

The unit is designed for industrial applications. The heavy-gauge 2” x 2” powder coated steel frame safeguards the unit from its surroundings, and aids with handling and storage. 8-inch swivel casters allow for improved mobility and maneuvering on job sites. Two of the swivel casters are equipped with rotational pin-locks, while the other two swivel casters are equipped with brakes for the securing the unit on-site as well as for storage and transit.

The Power Connection, Main Breaker and duct connections are all located on the left side of the unit for quicker installation and set-up. All electrical receptacles are equipped with weather proof covers. The 12-inch supply and return air collars are located on the same side to accomodate access to the controlled space. The Drain tube is located on the lower right side of the unit. The Drain Tube with P-trap is outfitted with a 3/4” MGHT connector for hose connection purposes. The unit is equipped with a storage compartment for the thermostat/cable assembly.

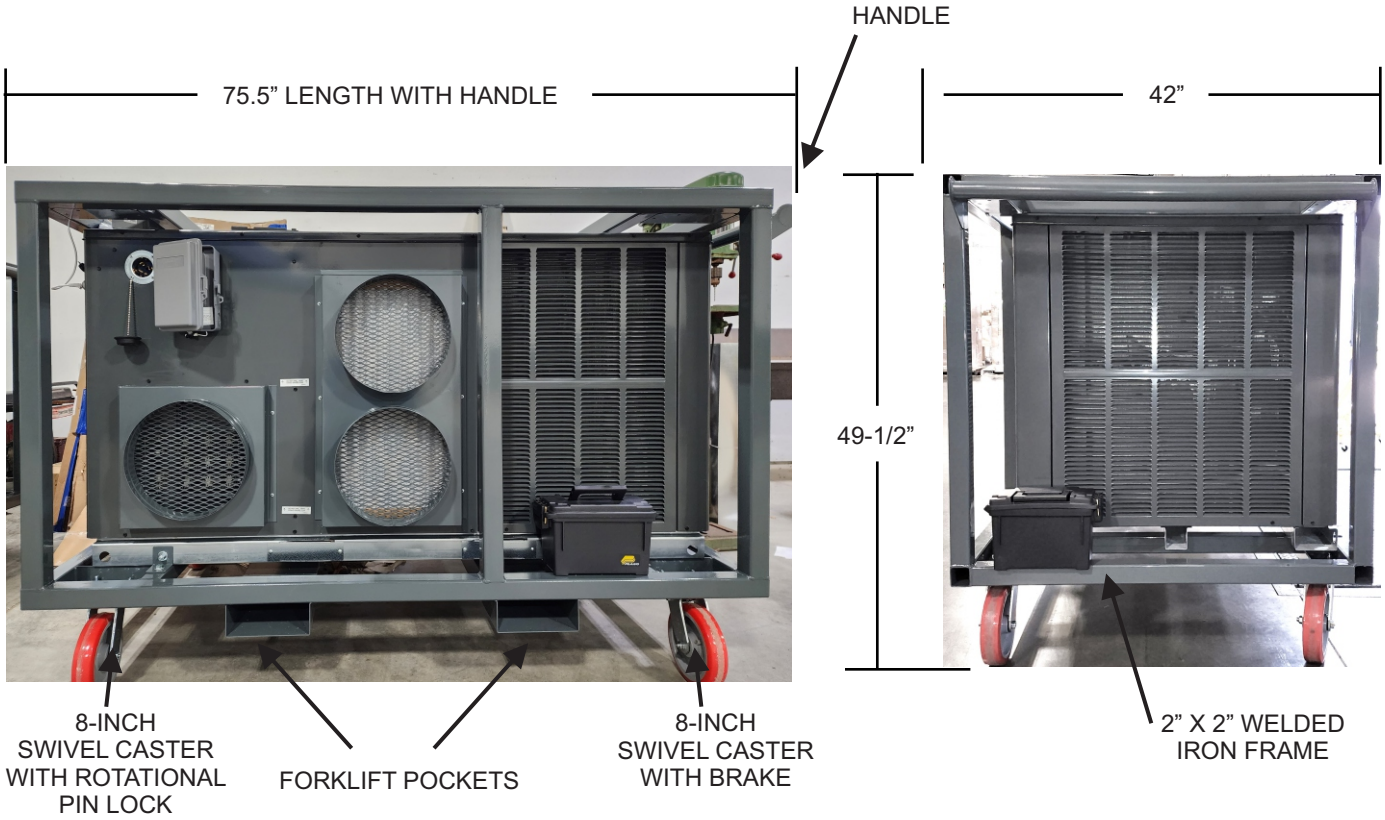

OPACH4212 LEFT SIDE

OPACH4212 FRONT

OceanAire

MODEL: OPACH4212

3.5 Ton Outdoor Portable Heat Pump with Auxiliary Heat

PRODUCT FEATURES

REFRIGERATION
- 3.5 Ton Scroll Compressor
- Integrated Compressor Protection
- Low Pressure and High Pressure Cut-Out

AUXILIARY HEAT
- 7 KW Electrical Heat for Low Temp Operation

ELECTRICAL
- Locking 250V Power Connection Receptacle
- 50 Amp Circuit Breaker for Unit Power Protection
- 40 Amp Auxiliary Heat Breaker
- 24 VAC Thermostat with 50 ft. detachable cable
- Automatic Defrost Modes (in Heating) 30/60/90 minutes
- Automatic Heat Mode Change Over from HP to Aux. Heat

BLOWER/FILTERS
- Multi-Speed ECM Evaporator Blower
- Static Capability Up to 0.7” ESP
- Totally Enclosed Condenser Fan Motor

CABINET
- 49” Tall x 42” Wide Profile
- 2 x 2 Steel Frame with Handle and Fork Pockets
- Wheel Pockets in Frame for Yard Storage (3 high - Maximum)
- 8-Inch Urethane Swivel Casters
  - Two Swivel with Rotational Locking Pins
  - Two Swivel with Brakes

DUCT PANELS
- Supply: 1 x 12” Dia. Duct Collar
- Return: 2 x 12” Dia. Duct Collar with integral Return Air Filter Frame
- Filter: (1) 14 x 25 x 1, Pleated

DRAIN
- P-Trap with 3/4” Male Garden Hose Connector

TECHNICAL SPECIFICATIONS

Cooling Capacity:	40,500 BTUH
Heating Capacity (HP):	37,600 BTUH
Aux. Heat Capacity:	7 KW
Voltage:	208-230V, 60Hz, 1PH
Amps:	31.8
Total Watts:	3780
Cooling Ambient:	Operating Range 25° to 115°
Cooling Capacity:	Total BTUH at 80°DB/67°WB Return air, 95°F Outdoor
EER:	11.6
Compressor:	Scroll
Compressor HP:	3.5
Compressor RLA:	17.9
Compressor LRA:	112
Evaporator CFM - High:	1200
Blower Type:	Forward Curved Blower
Evaporator Motor:	1/2-HP
Condenser Fan:	Propeller
COND CFM:	1750
Condenser Motor:	1/4 HP
Condensate Removal:	Gravity Drain
Refrigerant Charge:	132 ozs. R-410A
Height:	49.5″
Width:	75.5″ with handle
Depth:	42″
Net Weight:	670 lbs.

*Specifications subject to change without notice

OPACH4212 DETAILS

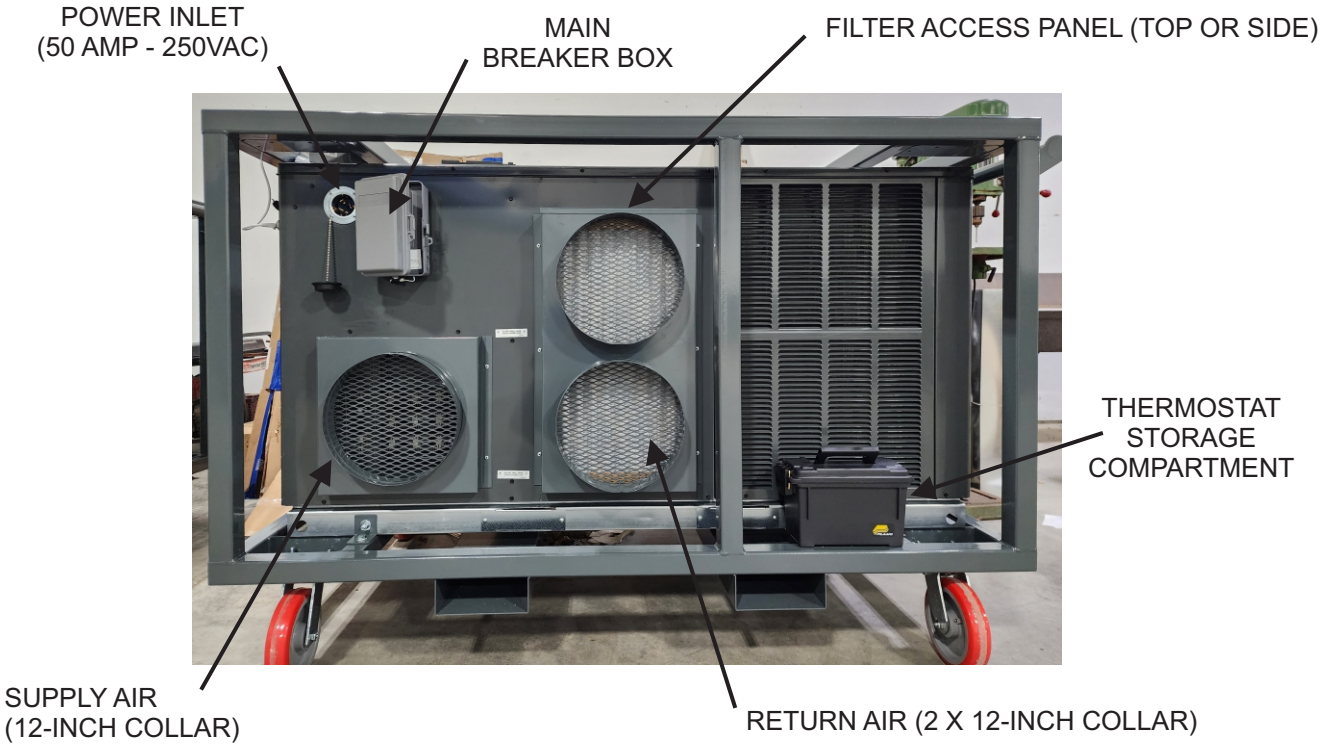

OPACH4212 LEFT SIDE

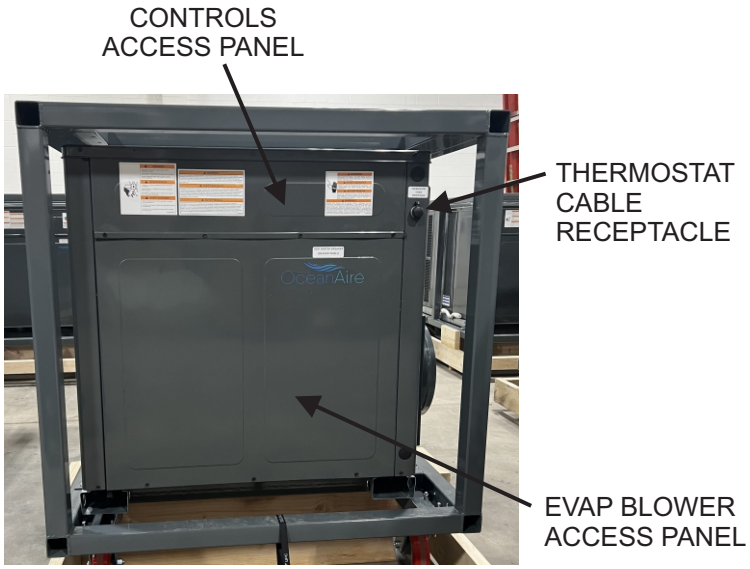

OPACH4212 REAR

NOTE: THE AUXILIARY ELECTRIC HEATER SAFETY BREAKER IS LOCATED BEHIND THE EVAP BLOWER ACCESS PANEL

OceanAire

MODEL: OPACH4212

SET UP GUIDELINES

CONNECT <u>ONLY</u> TO POWER SOURCE AS SPECIFIED ON UNIT NAMEPLATE

1. Set up the OPACH4212 unit on a level surface. Make sure that there are no objects on top of the unit. Maintain an operating clearance of 3 feet minumum on all sides of unit.
2. Remove Thermostat Assembly from Storage Compartment, and unwind the Thermostat Cable.
3. Locate Thermostat Cable Receptacle, remove the cover and connect the Thermostat Cable to the unit.
4. Connect Drain Hose using to the 3/4” MGHT Connector, and route drain hose away from unit to a drain ro sfae run-off location
5. Connect Power Cord to unit using the locking 250 VAC Receptacle

POWER INLET: Hubbell # CS8275 **POWER CONNECTOR: Hubbell # CS8264C, or Equivalent**

6. Check that all power connections are secure, and that the Main Breaker is ON (up position).
7. Connect Supply Power at Source and observe the thermostat display.
8. To Power OFF the unit, set the thermostat in the OFF position
10. Once the unit has shut down, it is safe to disconnect the POWER SUPPLY.

THERMOSTAT ASSEMBLY
STORAGE COMPARTMENT

THERMOSTAT
RECEPTACLE
(CLOSED)

THERMOSTAT
RECEPTACLE
(OPEN)

OPACH4212 DRAIN WITH
3/4” MGHT CONNECTOR

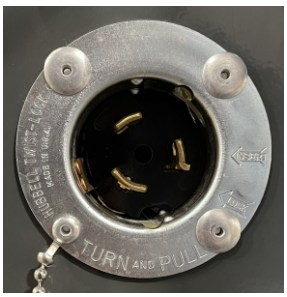

POWER INLET
(WITH COVER REMOVED)
Hubbell CS8275

MAIN POWER BREAKER
(COVER OPENED)

OPACH4212 CONTROLS

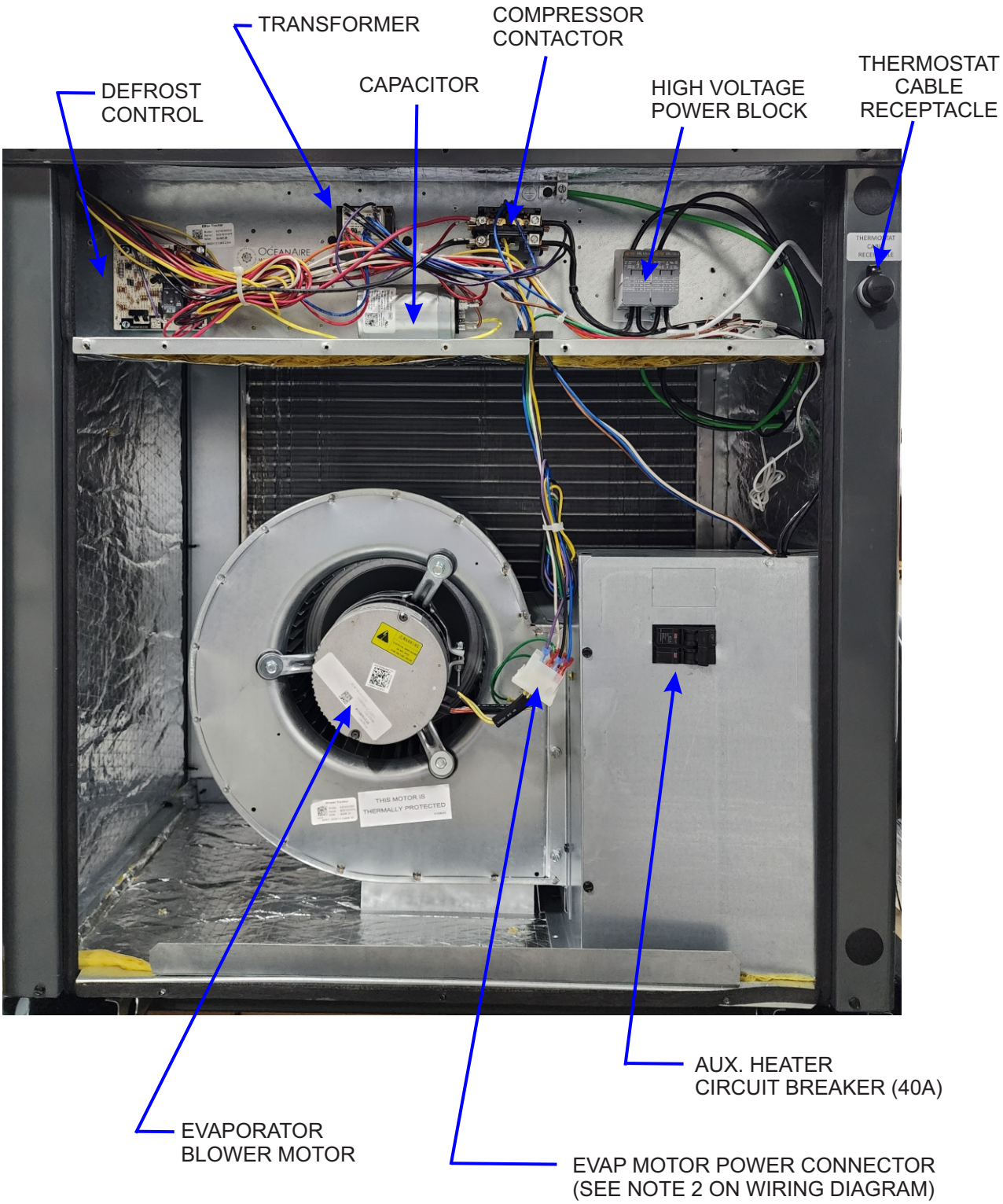

OPACH4212 WIRING DIAGRAM

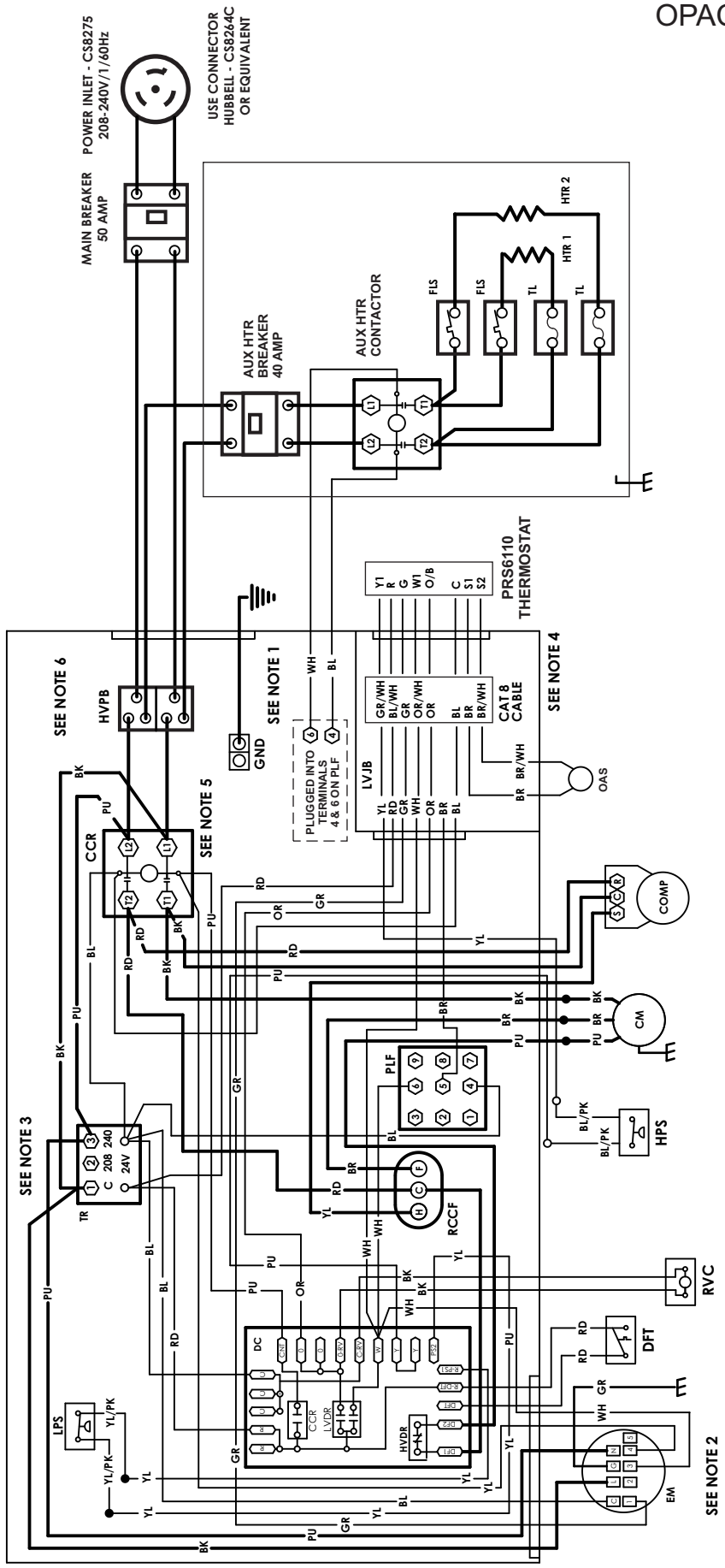

FACTORY WIRING

LINE VOLTAGE
LOW VOLTAGE

WIRE CODE

BK	BLACK
BL	BLUE
BL/WH	BLUE/WHITE
BR	BROWN
BR/WH	BROWN/WHITE
GR	GREEN
GR/WH	GREEN/WHITE
OR	ORANGE
OR/WH	ORANGE/WHITE
PU	PURPLE
RD	RED
WH	WHITE
YL	YELLOW

COMPONENT LEGEND

C	CONTACTOR
CCR	COMPRESSOR CONTACTOR RELAY
CM	CONDENSER MOTOR
COMP	COMPRESSOR
DC	DEFROST CONTROL
DFT	DEFROST THERMOSTAT
EM	EVAPORATOR MOTOR
GND	EQUIPMENT GROUND
HVPB	HIGH VOLTAGE POWER BLOCK
HVDR	HIGH VOLTAGE DEFROST RELAY
LPS	LOW PRESSURE SWITCH
LVDR	LOW VOLTAGE DEFROST RELAY
LVJB	LOW VOLTAGE JUNCTION BOX
PLF	FEMALE PLUG / CONNECTOR
RVC	REVERSING VALVE COIL
RCCF	RUN CAPACITOR FOR COMPRESSOR AND FAN
TR	TRANSFORMER
HPS	HIGH PRESSURE SWITCH
OAS	OUTDOOR AIR TEMP SENSOR
HTR	ELECTRIC HEAT ELEMENT
TL	THERMAL LIMIT
FLS	LIMIT SWITCH

NOTES:

1. REPLACEMENT WIRE MUST BE SAME SIZE AND TYPE INSULATION AS ORIGINAL (AT LEAST 105°C) USE COPPER CONDUCTOR ONLY.
2. TO CHANGE EVAPORATOR MOTOR SPEED IN COOLING MODE, MOVE YELLOW LEAD FROM EM" 4" TO "2"
3. FOR 208 VOLT TRANSFORMER OPERATION MOVE PURPLE WIRES FROM TERMINAL 3 TO TERMINAL 2 ON TRANSFORMER.
4. USE COPPER CONDUCTORS ONLY. USE N.E.C. CLASS 2 WIRE.
5. DOUBLE POLE CONTACTOR SHOWN. SINGLE POLE CONTACTOR COULD BE FACTORY EQUIPPED AS AN ALTERNATE CONFIGURATION.
6. COMMON SIDE OF CONTACTOR CAN NOT BE GROUNDED OR CONNECTED TO ANY OTHER COMMON (24V).

OPACH4212 START UP AND OPERATION

Powering and Starting the Unit - Follow the Instructions on Page 6 of this manual.

1.Make sure that the power supplied to the OPACH4212 unit matches the power shown on the unit nameplate, and that all power connections are correct and secured.

NOTE: Connecting the unit to an incorrect or faulty power source will void the warranty

2.Engage the MAIN POWER. The unit is now controlled by the thermostat.

Cooling Mode
Begin by pressing the SYSTEM button until the thermostat is in COOL Mode. Using the ARROW buttons, set the desired space temperature setpoint. Remember, cooling will begin once the space temperature has risen 3 degrees above the set point.

NOTE: The minimum setpoint in Cooling Mode is 55 degrees F

Heating Mode
Begin by pressing the SYSTEM button until the thermostat is in HEAT Mode. Using the ARROW buttons, set the desired space temperature setpoint. Remember, heating will begin once the space temperature has fallen 3 degrees below the set point. When in Heat Mode, the thermostat determines the heating operation according to a preprogrammed switch-over temperature.

When in HEAT mode, the unit will operate in Heat Pump mode until the outdoor temperature falls below the preprogrammed limit of 50 degrees. The unit will automatically switch to Electric Auxiliary Heat until the outdoor temperature rises above 50 degrees.

Fan Mode
Pressing the FAN button, allows the user to switch Fan Modes from AUTO to ON. In AUTO Mode, the fan will turn on and off as the unit cycles in Cooling or Heating Mode. In ON Mode, the fan will run continuously.

Circuit Breakers
The unit and the Auxiliary Heat Module are protected by power line circuit breakers.
The unit breaker will trip at 50 Amps, while the Auxiliary Heat Module is protected by a separate 40 Amp breaker, located behind the Blower Cover Panel. The control access cover and blower access panel will need to be removed to gain access to the heater breaker as shown on Page 7.

OPACH4212 Troubleshooting Guide

Start Up

Thermostat Display will not Illuminate

Check Incoming Power. Correct power supplied to unit.
Check MAIN Breaker and reset it, if needed.
Check the Thermostat Cable Connection at the unit. Re-seat the connector.

Thermostat works, Not Cooling

Check the thermostat to see if in COOL mode.
Check the thermostat to see if the setpoint is three degrees lower than the space temperature. Adjust the setpoint if needed, or wait until the space warms.
Check the incoming power for proper voltage plus the proper amperage to start the compressor. If not, contact an electrician.

Thermostat works, Not Heating

Check the thermostat to see if in HEAT mode.
Check the thermostat to see if the setpoint is three degrees higher than the space temperature. Adjust the setpoint if needed, or wait until the space cools.
Check the incoming power for proper voltage plus the proper amperage to start the compressor. If not, contact an electrician.
If outdoor temperature is below 50 degrees, remove the controls access panel and the blower access panel, and check the Aux. Heater Breaker. Breaker will display RED when tripped. Reset the breaker. The breaker will display GREEN when on.

LIMITED WARRANTY

The Manufacturer (Oceanaire, Inc.) warrants to the original owner that the Product will be free from defects in material or workmanship for a period not to exceed one (1) year from date of installation. If upon examination by the Manufacturer, the Product is shown to have a defect in material or workmanship during the warranty period, the Manufacturer will repair or replace, at its option, that part of the Product which is shown to be defective.

The Manufacturer further warrants that the product's compressor-motor will be free from defects in materials and workmanship for one year from the date of installation.

If upon examination by the Manufacturer the Product is shown to have a defect in materials or workmanship during the warranty period, the Manufacturer will repair or replace, at its option, that Part of the Product which is shown to be defective. Electrical parts such as relays, overloads, capacitors, etc., and the sealed refrigeration system (condenser and evaporator) are included in the one-year limited warranty, but not with the five-year limited warranty of the compressor.

This limited warranty does not apply to:

a) Product that has been subjected to misuse or neglect, has been accidentally or intentionally damaged, has not been installed, maintained or operated in accordance with the furnished written instructions, or has been altered or modified in any way.

b) Product that has been subjected to any abnormal power conditions such as loss of power, power surges, voltage irregularities such as brown-outs or phase loss (on three-phase equipment).

c) any expenses, including labor or material, incurred during removal or reinstallation of the Product.

d) any workmanship of the installer of the Product.

This limited warranty is conditional upon:

a) return to the Manufacturer, of the part of the Product thought to be defective.

   Goods can only be returned with prior written approval from the Manufacturer.
   All returns must be freight prepaid.

b) determination in the reasonable opinion of the Manufacturer, that there exists a defect in material or workmanship.

Repair or replacement of any part under this Limited Warranty shall not extend the duration of the warranty with respect to such repaired or replaced part beyond the stated warranty period.

THIS LIMITED WARRANTY IS IN LIEU OF ALL OTHER WARRANTIES, EITHER EXPRESSED OR IMPLIED, AND ALL SUCH OTHER WARRANTIES, INCLUDING WITHOUT LIMITATION IMPLIED WARRANTIES OF MERCHANTABILITY OR FITNESS FOR A PARTICULAR PURPOSE, ARE HEREBY DISCLAIMED AND EXCLUDED FROM THIS LIMITED WARRANTY. IN NO EVENT SHALL THE MANUFACTURER BE LIABLE IN ANY WAY FOR ANY CONSEQUENTIAL, SPECIAL, OR INCIDENTAL DAMAGES OF ANY NATURE WHATSOEVER, OR FOR ANY AMOUNTS IN EXCESS OF THE SELLING PRICE OF THE PRODUCT OR ANY PARTS THEREOF FOUND TO BE DEFECTIVE. THIS LIMITED WARRANTY GIVES THE ORIGINAL OWNER OF THE PRODUCT SPECIFIC LEGAL RIGHTS. YOU MAY ALSO HAVE OTHER RIGHTS WHICH MAY VARY BY EACH JURISDICTION.